Mehran University Research Journal of Engineering and Technology

https://doi.org/10.22581/muet1982.0032

2025, 44(3) 01-09

Fault analysis of railway track superstructure using time-frequency method from vibrational data

Shahzor Memon [a, c, *], Imtiaz Hussain [b], Lubna Moin [c]

[a] *Department of Electrical Engineering, Hamdard University, Karachi, Pakistan*

[b] *Department of Computer Science, Iqra University, Karachi, Pakistan*

[c] *Department of Electrical Engineering, PNEC NUST, Karachi, Pakistan*

[*] Corresponding author: Shahzor Memon, Email: shahzor.memon@hamdard.edu.pk, shahzor.phdee22pnec@student.nust.edu.pk

Received: 19 December 2024, Revised: 04 April 2025, Accepted: 30 June 2025, Published: 01 July 2025

K E Y W O R D S

Track fault Analysis

Short-Time Fourier transform

Fast Fourier Transform

Vibrational Data

Time-Frequency

A B S T R A C T

Deficiencies in railway track superstructure can result in accidents, leading to human casualties and financial losses. Axle loads and speed, insufficient rail hardness, environmental factors, wear, and corrosion lead to corrugation, ballast issues, and other track surface faults that lead to accidents. A manual examination is prone to mistakes, is time-consuming, and can be biased. Automated inspection offers a rapid, reliable, and impartial choice. To obtain better performance, the research focuses on the time-frequency analysis of vibrational data using the Fast Fourier Transform and Short-time Fourier transform to identify the fault signatures. Car body acceleration simulated by a coupled 2D train track Bridge interaction model with 6 DOF of train vehicle with 5 layered track model. The results indicate a change in the elevation of the vehicle's profile owing to the ballast module deformation and the welds at the ends of the bogies. In turn, the corrugation and ballast irregularities affect the vertical acceleration of the car body, by examining the time-domain responses and frequency-domain spectrograms (via Short-Time Fourier Transform (STFT) analysis). The results indicate that track faults such as corrugation introduce dominant high-frequency components (typically below the range of 50 Hz) with moderate amplitude. At the same time, ballast issues manifest as low-frequency components (below 30 Hz) with increased amplitude escalation. The safety and operational efficiency of railroads could be improved by further research that combines these time-frequency characteristics with machine learning algorithms to increase fault detection accuracy and create monitoring systems for more effective proactive maintenance.

1. Introduction

The railways have long been seen as the backbone of a nation's economy, transporting people and goods while also having the ability to boost financial security. Governments and the general public find trains attractive because they carry more people than other modes of transportation. One of the most energy-efficient modes of transportation is rail. Despite consuming only 3% of all transportation energy, it accounts for 8% and 9% of worldwide passenger and freight transit, respectively [1]. But, like all forms of transportation, railways are not without risks. Accidents and derailments, though relatively infrequent, can have devastating consequences for passengers, operators, and communities.

Railway accidents come in various forms, such as Derailments, Collisions, Level Crossing Accidents, and so on. Safety is an important concern for any

© Mehran University of Engineering and Technology 2025

railway system, as an accident could have serious effects. As a safety-critical system, every component of the railway infrastructure, from tracks and bridges to coaches and trucks, must work safely [2].

The railway track is one of the most crucial components of railway infrastructure, as all railway functions rely on properly maintained tracks for train operations. Continuous wear and tear on the tracks often leads to deformities. If these issues are not detected and repaired promptly, they can result in derailments and accidents, which must be prevented for safe railway operation.

Railways typically cover vast areas across a country, consisting of thousands of kilometers of tracks, numerous bridges, tunnels, and other infrastructure. For example, Pakistan Railways (PR) has a network of 7,791 route km. A total of 445 km of meter gauge and 7,346 km of wide gauge. The network contains 633 stations, 1,043 km of double-track segments, and 285 km of electrified sections [3]. Main Line 1, or ML-1, is another Karachi–Peshawar Railway Line name. This railway line is 1,687 kilometers (1,048 miles) long length. It is practically hard to manually check for structural deterioration and anomalies so that they can be properly maintained, given these huge infrastructures.

The main causes of rail derailments include track flaws such as vertical misalignment, corrugation, and ballast problems. Demanding a significant amount of time and money, manual inspections are frequently biased and prone to mistakes in judgment. To mitigate derailment hazards and facilitate efficient track monitoring, an automated method is required. The goal is to develop a method that can evaluate the inputs and clearly show whether or not the track is defective.

This study is concerned with creating a system that can analyze vibrational signals from the Train Track interaction model and identify the track fault signatures using the time domain and frequency domain spectrogram using STFT.

Railways are a vital mode of transportation in Pakistan but have recently faced a series of catastrophic incidents. Considering this, railway tracks play a critical role in derailments, highlighting the need for an efficient and reliable track fault detection system.

The regional railways currently use a track condition monitoring system to make continuous vibration measurements of in-service vehicles. The monitoring approach analyzes the vibration signature to identify fault by taking car body acceleration and converting it into a root-mean-square (RMS) value to generate an assessment measure. However, as the frequency information is lost, it can be hard to identify and track problems by type using only RMS values.

This study uses a 2D train-track-bridge interaction model to analyze time-frequency characteristics of vehicle vertical acceleration in order to develop an automated railway track fault detection system. The study finds fault signals linked to track surface imperfections like corrugation and ballast deficiencies by using the Fast Fourier Transform (FFT) and Short-Time Fourier Transform (STFT), the goal is to Analyze the defect identification. Future research will use the results as a basis to extract significant frequency-domain features for better defect detection and classification, which will improve railway safety and maintenance.

The structure of this paper is as follows: A discussion of track condition monitoring techniques using in-service cars is provided in Section 2. Track condition monitoring with time-frequency analysis is covered in Section 3. Section 4 shows how to use FFT and STFT to monitor track conditions based on vibrations from a car's body. Section 5 uses a 2-D vehicle track and bridge interaction model to detect track defects from simulated car-body vibration. Section 6 describes the results of the study. Lastly, a conclusion and acknowledgment are provided in Section 7 and 8.

2. Review of Track Condition Monitoring

Over the past ten years, rail track geometry monitoring from an in-service vehicle has grown in popularity. In-service vehicle-based track geometry measurement devices are becoming more and more popular worldwide. when the same track is checked repeatedly, information about track geometry degradation is obtained. This information can then be utilized by the track maintenance division to take necessary action.

One significant approach involves the use of the Hilbert-Huang Transform (HHT), which has been shown to effectively analyze car-body vibrations to detect track faults. Tsunashima and Hirose demonstrated that HHT provides high time-frequency resolution, allowing for the identification of specific track faults through the analysis of intrinsic mode functions derived from vibration signals [5]. This method has been validated through field tests, confirming its effectiveness in real-world applications.

Moreover, the integration of machine learning techniques with time-frequency analysis has further enhanced fault detection capabilities. For instance, Tsunashima and Takikawa proposed a convolutional

© Mehran University of Engineering and Technology 2025

neural network (CNN) approach that classifies track faults by analyzing car-body acceleration data transformed into a time-frequency plane using continuous wavelet transform [6]. This method not only automates the classification process but also improves the accuracy of fault identification, enabling timely maintenance interventions. In addition to these methods, acoustic analysis has emerged as a complementary technique for fault detection in railway tracks. Siddiqui et al. utilized acoustic data to identify various types of track faults, employing machine learning classifiers to enhance detection accuracy [1]. This approach highlights the importance of multi-modal data analysis, where vibrational and acoustic signals can be combined to assess track conditions comprehensively.

Furthermore, the use of neural networks has been explored in the context of railway track circuit faults. Mhmood's work on neural network-directed fault localization and detection shows how artificial intelligence may improve fault diagnosis systems [7]. By leveraging the Dempster-Shafer theory, this approach allows for improved decision-making in fault identification, thereby increasing the reliability of railway operations. The dynamic nature of railway operations underscores the need for continuous monitoring and assessment of railway track conditions. As highlighted by Solonenko et al., comprehensive monitoring of the railway track system is crucial for understanding its dynamic behavior and ensuring safety [8].

3. Monitoring Track Condition Through Time-Frequency Analysis

3.1 Track Defects and Vehicle-Track Contact Response

Railway operators must monitor track defects, including corrugation, ballast discontinuities, and vertical misalignment, to prevent accidents.

Track defects generate vehicle vibrations, which reduce rider comfort and increase the risk of derailment. Vehicle vibrations and track defects have a strong correlation. As a result of evaluating vehicle and track interaction vibrations, broad trends in track conditions can be estimated.

3.2 Time-Frequency Analysis

3.2.1. Fast Fourier Transform (FFT)

The Fast Fourier Transform (FFT) is a transformation technique used to compute the Discrete Fourier Transform (DFT) of a signal efficiently. It allows the examination of a signal's frequency components by converting it from the time domain to the frequency domain. The DFT of a discrete signal $x[n]$ can be found mathematically as follows:

$$X[k] = \sum_{n=0}^{N-1} X[n]\, e^{-j\frac{2\pi}{n}kn},\ K = 0,1 \ldots., N-1 \quad (1)$$

X[k] represents the frequency-domain representation of the signal. $x[n]$ is the time-domain signal. N is the total number of points in the signal. k is the frequency index. j is the imaginary unit.

3.2.2 Short Time Fourier Transform (STFT)

The Short-Time Fourier Transform (STFT) is a mathematical technique used to analyze the frequency content of non-stationary signals over time. It divides the signal into overlapping or non-overlapping segments (windows) and computes the Fourier Transform for each segment, thereby providing a time-frequency representation of the signal.

Mathematically, the STFT of a signal x(t) is defined as:

$$X(t,f) = \int_{-\infty}^{+\infty} x(\tau)\omega(\tau - t)e^{-2\pi f\tau}d\tau \quad (2)$$

X(t,f) is the time-frequency representation of the signal, $x(\tau)$ is the time-domain signal. $w(\tau{-}t)$ is a window function centered at time t, which localizes the analysis in time. f represents the frequency. j is the imaginary unit.

4. Complementary Roles of FFT and STFT in Track Defect Analysis

The analysis of track faults in railways requires knowledge of both global frequencies and time-identified transients. For that purpose, we use FFT and STFT as a complement tool for signal analysis.

Fast Fourier Transform (FFT) provides Global Frequency-Domain Insights by transforming the time-domain acceleration signal into the frequency domain, FFT provides a global spectral representation. This method is very useful for persistent and periodic track flaws such as rail corrugation. It shows these defects as distinct peaks on the low-frequency band ranging from 20-50 Hz. Unfortunately, FFT does not witness time-specific changes, so it is largely ineffective for events such as ballast discontinuities which are localized or transient.

Short Time Fourier Transform (STFT) provides Time-Localized Transient Detection STFT enhances traditional FFT analysis by replacing the fixed window with a sliding window. This allows the analyst to identify when specific frequency components occur. In addition, it helps in the time-frequency domain representation of non-stationary defects like sudden ballast discontinuities, which may not produce clear signatures in FFT spectrum.

5. Detection of Track Faults from Simulated Wheel Track Bridge Interaction Model

The Train Track Interaction model comprises two sub-categories the train and the track (see Fig. 1) which interact and couple at the contact points and is modeled using MATLAB software R2022b.

The track model consists of the rail, sleeper, pad, ballast, and sub-ballast, while the vehicle model is handled as a multi-rigid-body model. The ballast and sleeper are simplified to lumped masses, and the rail is assumed to be a Euler-Bernoulli beam supported by discrete sleepers.

The Newmark Beta Method is used to solve the large-scale coupled vehicle–track nonlinear dynamic model's response.

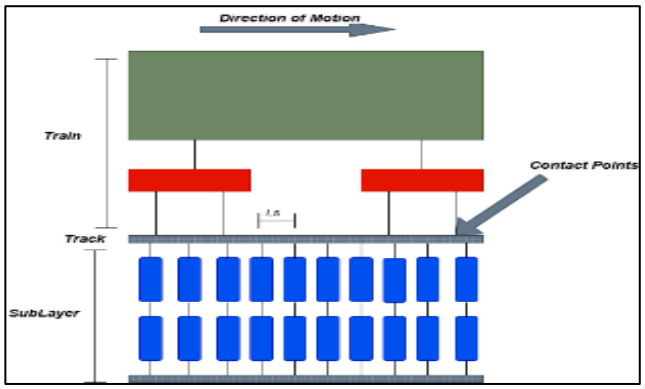

Fig. 1. Schematic of the train track coupled model

5.1 Track and Bridge Dynamic Model

The track model used in this paper (refer to Fig. 2) is composed of five sub-levels represented by sprung masses and a rail acting as a beam at the surface. The sub-levels stand as the role of sleepers, ballast, and subgrade, while the beam represents the rail. Four degrees of freedom are available to each Euler–Bernoulli Finite Element (FE) beam, which is how the rail beam is made: two translational and two rotational degrees of freedom.

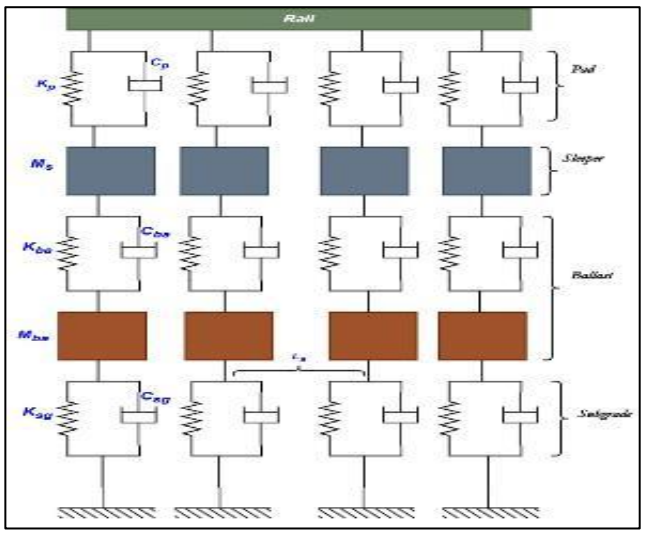

Fig. 2. 5 Layered Railway Track Numerical Model

Table 1

Properties of 5 layered track model

Property	Unit	Value
Rail Elastic Modulus	N/m^2	2.059x1011
The cross-sectional area of Rail	m^2	1
Second moment of area of Rail	m^4	3.217x10-5
Mass per unit length of Rail	kg/m	60.64
Pad stiffness	N/m	6.5x107
Pad damping	Ns/m	7.5x104
Sleeper mass (Half)	kg	125.6
Sleeper spacing	m	0.545
Stiffness of Ballast	N/m	137.75x106
Damping of Ballast	Ns/m	5.88x104
Mass of Ballast	kg	531.6
Subgrade Damping	Ns/m	3.115x104
Subgrade stiffness	N/m	77.5x106

The system of equations provides the modeled track's dynamic responses to a time-varying force at each time step.

$$M_t\,\ddot{y}_t + C_t\,\dot{y}_t + K_t y_t = f_{int} \quad (3)$$

Where M_t,$C_{t,}$ and K_t are the mass, damping, and stiffness matrices of the model, respectively; $\ddot{y}_t$, $\dot{y}_{t,}$ and y_t are the corresponding vectors of acceleration, velocity, and displacement. The time-dependent dynamic interaction forces between the train and track are represented byf_{int}.

The bridge is modeled by a discretization of the Finite Element Model (FEM) as an Euler-Bernoulli beam. The beam is resting by elastic support. The user can specify the number of supports, their placement, rotational stiffness, and vertical stiffness.

5.2 Train Dynamic Model

The model of a train car has three rotational DOFs, two at the bogies, and one on the car body, while it has an additional seven DOFs which are translational, two for the bogies, and one for the body. the symbols *mw*, *Jb* and mb denote wheelset mass, moment of inertia, and bogie mass respectively: *mv* and *Jv* represent body mass and its moment of inertia respectively. The main suspension system connects the wheels to the bogies using viscous dampers with *Cpa* dampening and a spring with *Kpa* stiffness. Similarly, the bogie and main body are connected by a spring with *ks* stiffness and a viscous damper with *Cs* damping. Table 2 shows the mechanical properties of the half-train system.

© Mehran University of Engineering and Technology 2025

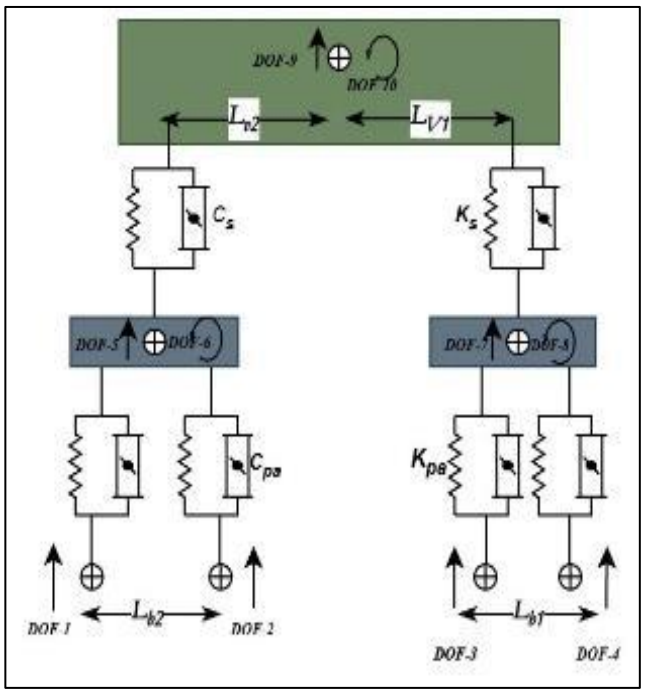

Fig. 3. Train Half Car Numerical Model

Table 2

Properties of Half Train Model

Property	Unit	Value
Wheelset mass	kg	1843.5
Mass of Bogie	kg	5630.8
Mass of Car body	kg	59364.2
Bogie Moment of inertia	kg/m^2	9487
Main Body Moment of inertia	kg/m^2	1.724x10^6
Stiffness of Primary suspension	N/m	2.398x10^6
Secondary suspension stiffness	N/m	0.8858x10^6
Damping of Primary suspension	Ns/m	30x10^3
Damping of Secondary suspension	Ns/m	45x10^3
Gap Between car body center Of mass and bogie pivot	m	5.73
Distance between axles	m	3

The second-order differential equation, which represents the equations of motion, can be used to measure the vehicle's dynamic responses as follows:

$$M_v\ \ddot{y}_v + C_v\,\dot{y}_v + K_v y_v = f_v \qquad (4)$$

Where M_v, K_v , and C_v are the mass, stiffness, and damping matrices of the train model, respectively; Where $\ddot{y}_v$, $\dot{y}_v$, and y_v indicate the train's acceleration, velocity, and displacement, respectively. The vector f_v denotes the dynamic interaction forces imparted to the vehicle DOFs through the rail displacements and track profile.

5.3 Wheel Rail Interface

Many models can characterize the interaction between the wheel and the rail. In addition to the standard Hertzian elastic contact theory, more complex models encompassing frictional behavior, braking/traction forces, and longitudinal creepage were established in the literature.

The longitudinal forces and displacements of the track and vehicle subsystems are not considered in the current analysis. This is mostly due to the research's intention to concentrate on the vehicle-track system's roll, pitch, and bounce motions. Consequently, a normal-direction nonlinear Hertzian contact theory is applied.

To solve such PDE equations with rail irregularities acting as excitation sources, the numerical time integration approach of Newmark-β is used. This method is comparatively well-liked for numerically integrating the equations of motion in structural dynamics, particularly for nonlinear systems.

6. Results of Numerical Simulations

Table 1 and Table 2 provide a list of Track and Half Train Model parameters used for the simulation. A straight 370 m section was chosen as the distance the running speed was set to 28 m/sec, and the sampling frequency was fixed to 100 Hz.

The results are now separated for three different conditions initially when there is no fault appeared on the surface of the track with Normal profile elevation, then two faults corrugation, and Ballast discontinuity issues are introduced in the simulation model at a different span of the track length and their effects are shown separately.

6.1 Normal Profile Elevation

The Normal profile elevation of the railway track generated using the German high-speed track irregularity spectra is shown in Fig. 4. These results provide a baseline dynamic signature for normal track conditions, serving as a reference for identifying deviations caused by different faults such as corrugation and Ballast discontinuity. The car-body vertical acceleration of the Main Body that was taken from the Simulation Model is depicted in Fig. 5.

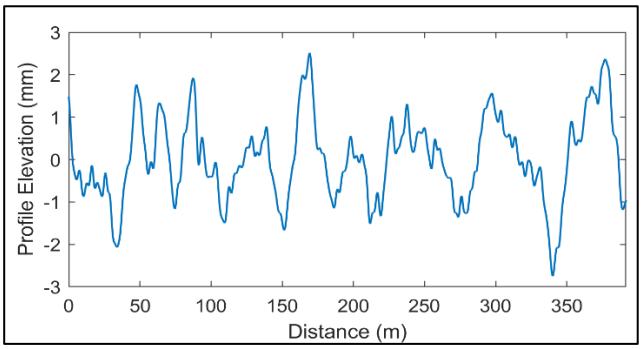

Fig. 4. Profile Elevation at No Fault Condition

© Mehran University of Engineering and Technology 2025

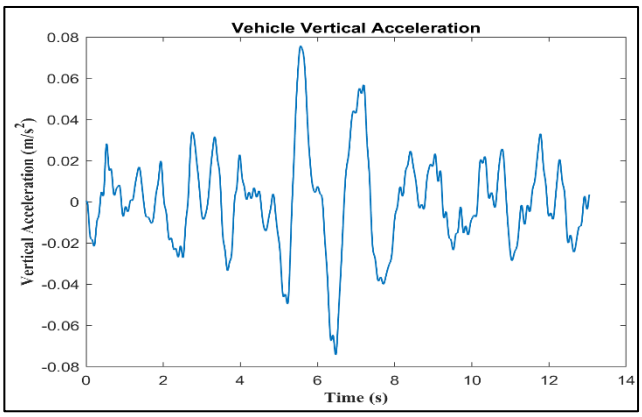

Fig. 5. Vertical Acceleration at No Fault Condition

A combined plot of time response with frequency response using STFT spectrogram and FFT incorporating the bridge dynamics at a track length of 140-165 m of track length is shown in Fig. 6. The spectrogram highlights consistent frequency bands, indicating stable dynamic behavior under normal track conditions. However, there is a concentration of lower-frequency components (below 30 Hz), likely linked to Bridge Dynamic effect. The FFT plot shows dominant low-frequency components, which are characteristic of the bridge's natural frequencies and the vehicle's response to track irregularities.

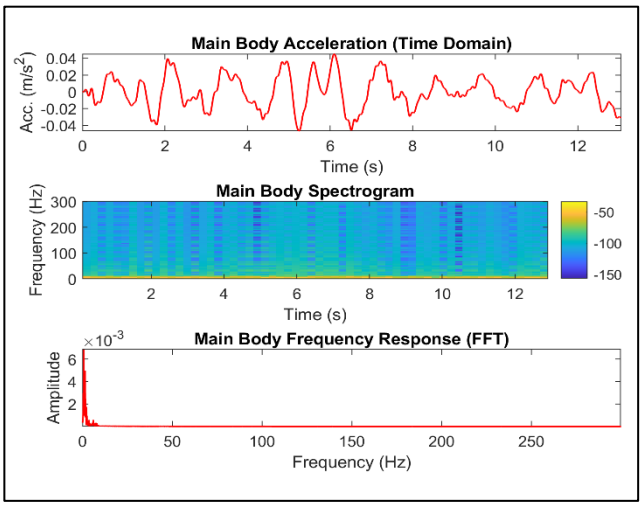

Fig. 6. Combined plot for vertical acceleration of car body at no fault condition in time domain and its STFT and FFT response

6.2 Corrugation

Rail corrugation refers to a series of regular, wave-like wear patterns that develop on the surface of railway tracks over time as shown in Fig. 7. Rail corrugation is caused by a combination of mechanical and dynamic factors, including Wheel-rail interaction, Material properties, Traction, and braking resulting in consequences as noise and vibration, Accelerated wear and tear, and even derailments. In the simulation Model, the long-pitch wavelength corrugation fault was added at 40-42 m of track length. The corrugation fault is added to the simulation model by modifying the rail surface profile to reflect periodic irregularities characteristic of corrugation. It is achieved by superimposing a sinusoidal function onto the rail surface profile to simulate the corrugation. the rail height h(x) at position x can be expressed as:

$$h(x) = A\sin\left(\frac{2\pi x}{\lambda}\right)$$

Wavelength (λ) is fixed at 10 mm and Amplitude A is fixed at 1mm. The track profile after introducing the corrugation fault is depicted in Fig. 8. The impact of Rail Corrugation on vehicle vertical acceleration can be assessed in Fig. 9.



Fig. 7. Rail Corrugation [19]

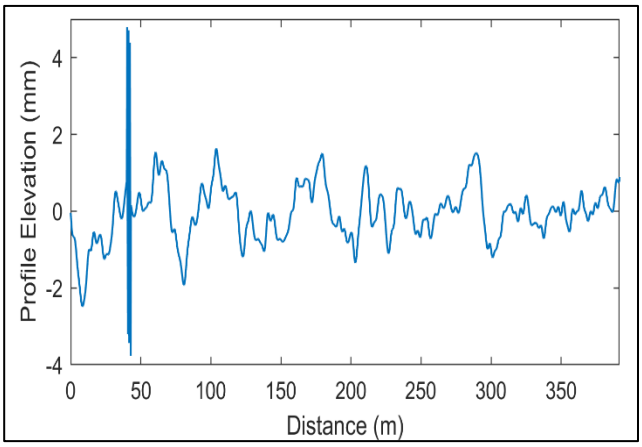

Fig. 8. Corrugated Rail Profile Elevation

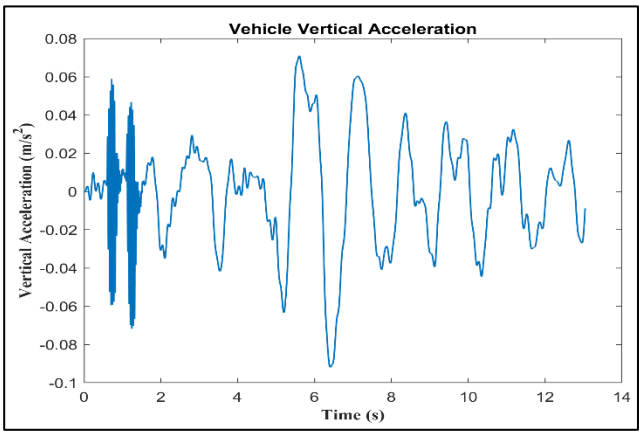

Fig. 9. Impact of Corrugation on Vehicle Vertical Acceleration

Fig. 10 illustrates the combined plot of time response with frequency response using STFT spectrogram and FFT subjected to bridge dynamics at

© Mehran University of Engineering and Technology 2025

140-165 m of track length and rail corrugation fault at 40-42 m of track length. The time-domain plot shows significant variations in acceleration at 1-sec duration, indicating the presence of rail corrugation. The spectrogram highlights Strong frequency components appear below 50 Hz, which aligns with typical corrugation-induced vibrations that often fall within the 20–50 Hz range. Again a concentration of lower-frequency components (below 30 Hz), likely linked to Bridge Dynamic response. The FFT plot further confirms the presence of prominent low-frequency components, the strong peak around 20–30 Hz suggests the presence of corrugation. However, the Bridge's Natural response can also be observed (below 30 Hz) as a dominant low-frequency component in the FFT response.

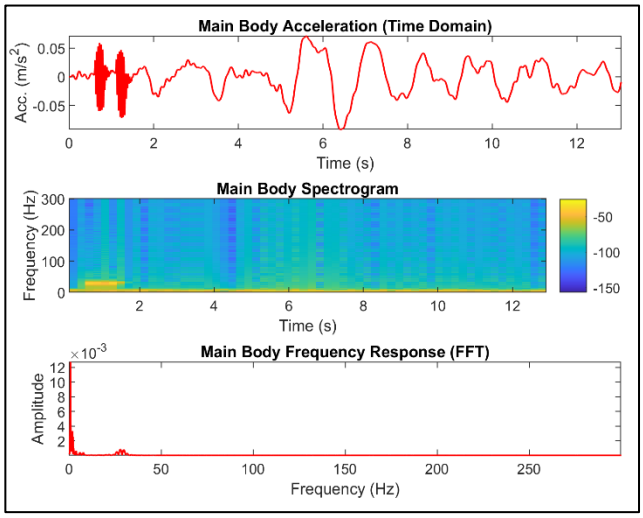

Fig. 10. Combined plot for Vertical acceleration in the Time domain and its STFT and FFT Response subjected to Corrugation and Bridge Dynamics

6.3 Ballast Discontinuity

Ballast discontinuity refers to an irregularity or disruption in the ballast layer beneath the railway track as shown in Fig. 11. The ballast is a bed of crushed stones that provides stability, drainage, and load distribution to the track structure. Discontinuity can occur due to uneven settlement, degradation, missing ballast, or poor maintenance. This can result in uneven support for the rails and sleepers, leading to dynamic instabilities. The Ballast discontinuity fault was added in the simulation model at 135 m of track length. The Ballast Discontinuity is added to the simulation model by modifying the track's vertical geometry to reflect localized depressions in the ballast layer. A Gaussian dip function is utilized at the desired location x to mimic the particular fault:

$$h(x) = -A\exp(-(x - x0)^2/2\sigma^2)$$

A is discontinuation depth set to 30 mm, σ is standard deviation fixed at 5, and $x0$ is center position = 130, The track profile after introducing the Ballast Discontinuity fault is depicted in Fig. 12. The impact of Ballast Discontinuity on vehicle vertical acceleration can be assessed in Fig. 13.



Fig. 11. Uneven Ballast Discontinuity Fault

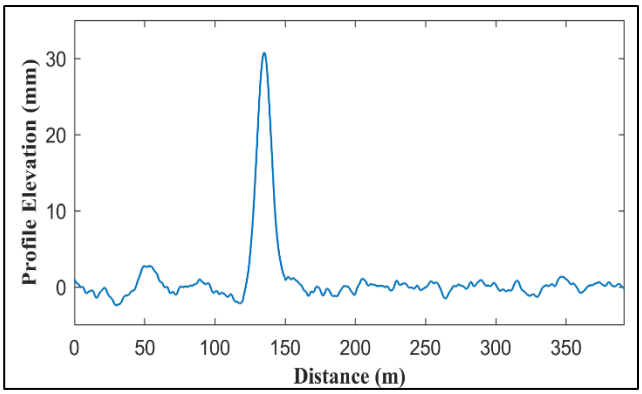

Fig. 12. Ballast Discontinuity Profile Elevation

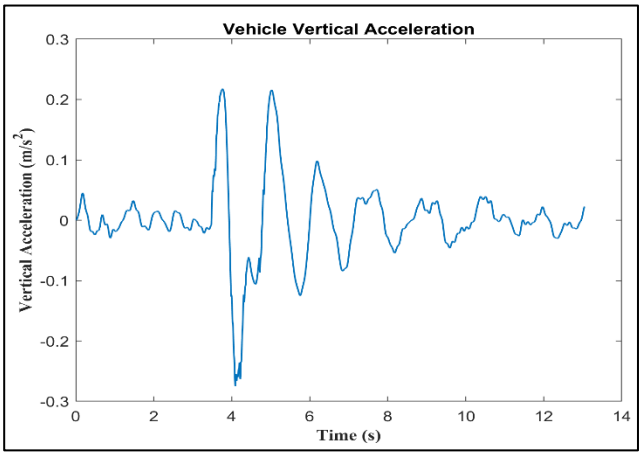

Fig. 13. Impact of Ballast Discontinuity on Vertical Acceleration

Fig. 14 illustrates the combined plot of time response with frequency response using STFT spectrogram and FFT subjected to bridge dynamics at a track length of 140-165 m of track length and a Ballast discontinuity fault at 135 m of track length. The first plot shows the vertical acceleration of the main body. A sharp spike can be observed at about 4 s, indicating the presence of a disturbance likely caused by the ballast discontinuity. The STFT spectrogram illustrates The high-energy regions below 50 Hz at the same instant of time correspond to the

© Mehran University of Engineering and Technology 2025

sudden acceleration changes due to the ballast fault, with energy distributed over various frequencies Again a concentration of lower-frequency components (below 30 Hz), likely linked to Bridge Dynamic response. The third plot shows the frequency spectrum of the acceleration signal. The frequency components are concentrated at lower frequencies, highlighting the dynamic effect of the ballast discontinuity on the vehicle's response the Bridge's Natural response can also be observed as a dominant low-frequency component in the FFT response.

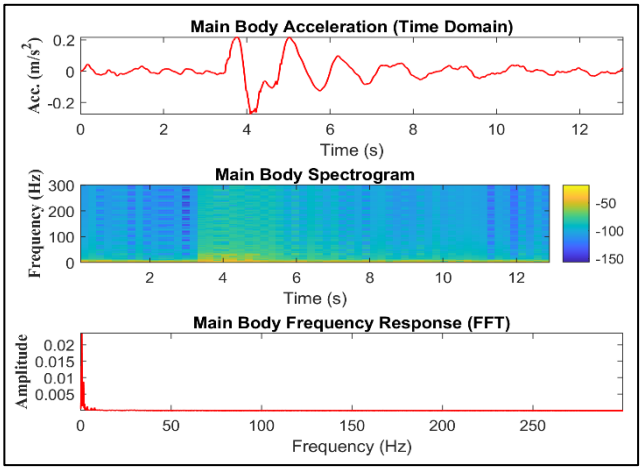

Fig. 14. Combined plot for vertical acceleration in the time domain and its STFT and FFT response subjected to ballast discontinuity fault and bridge dynamics

From the results above it can have inferred that corrugation fault makes a Significant variation in acceleration, causes small vibrations but doesn't severely damage the train. However, the Ballast discontinuity fault causes huge force spikes and high acceleration, can damage the train and track, Makes the ride very uncomfortable, and risk of derailments.

7. Conclusion

In this study, we analyzed car-body vertical acceleration data using the Short-Time Fourier Transform (STFT) and Fast Fourier Transform (FFT) techniques to identify railway track faults. Our simulations, which used a 2D Train-Track-Bridge Interaction model with a six-DOF vehicle and a five-layer track construction, showed that defects like corrugation and ballast discontinuities appear in the acceleration spectrum as low-frequency components below 50 Hz. Although these results highlight the potential of FFT and STFT in fault identification, it is important to take some limitation of the research in consideration the research focuses on 2D Model, however the accuracy of simulated data can be increased by creating more thorough 3D models that take into consideration a greater variety of dynamic interactions.

8. Future Recommendation

Future Development in the area of research can be integrating AI-driven models that analyze time-frequency features from vibrational data can improve the accuracy of fault detection. These models can learn from vast datasets to identify patterns indicative of specific track defects.

Acknowledgment: I would like to express my sincere gratitude to Dr. Daniel Cantero, the author of "TTB-2D: Train–Track–Bridge interaction simulation tool for Matlab," for his invaluable guidance and support in implementing the train-track dynamic model. His expertise and insights were instrumental in the successful completion of this work.

9. References

[1] R. Shafique et al., "A Novel Approach to Railway Track Faults Detection Using Acoustic Analysis", Sensors, 2021.

[2] Wikipedia contributors, "Pakistan Railways", Wikipedia, The Free Encyclopedia, Nov. 9, 2023. [Online]. Available: https://en.wikipedia.org/w/index.php?title=Pakistan_Railways&oldid=1184270149

[3] D. Cantero, "TTB-2D: Train–Track–Bridge interaction simulation tool for Matlab", SoftwareX, 2022.

[4] D. Cantero, T. Arvidsson, E. O'Brien, and R. Karoumi, "Train–track–bridge modeling and review of parameters", Struct. Infrastruct. Eng., vol. 12, no. 9, pp. 1051–1064, 2016. [Online]. Available: http://dx.doi.org/10.1080/15732479.2015.1076854

[5] H. Tsunashima and R. Hirose, "Condition monitoring of railway track from car-body vibration using time-frequency analysis", Veh. Syst. Dyn., vol. 60, pp. 1170–1187, 2022.

[6] H. Tsunashima and M. Takikawa, "Monitoring the Condition of Railway Tracks Using a Convolutional Neural Network", in Recent Advances in Wavelet Transforms and Their Applications, IntechOpen, Nov. 23, 2022. doi: 10.5772/intechopen.102672

[7] Mhmood, Z.S., Nasret, A.N., Noori, A.B., Mohammed, A.B. (2023). Neural network-directed detection and localization of faults in railway track circuits: An application of Dempster-Shafer theory. Ingénierie des Systèmes d'Information, Vol. 28, No. 3, pp. 583-593. https://doi.org/10.18280/isi.280306

© Mehran University of Engineering and Technology 2025

[8] Castillo-Mingorance, J.M.; Sol-Sánchez, M.; Moreno-Navarro, F.; Rubio-Gámez, and M.C. A Critical Review of Sensors for the Continuous Monitoring of Smart and Sustainable Railway Infrastructures. Sustainability 2020, 12, 9428. https://doi.org/10.3390/su12229428

[9] C. Zhao, Y. Wang, Y. Zhao, and D. Shi, "Identification of Multiple Defects from Rail Vibration Signals Based on Fast Kurtogram", J. Transp. Eng., vol. 149, no. 6, 2023, Art. no. 04023035. doi: 10.1061/JTEPBS.TEENG-7783

[10] N. Ahsan et al., "A critical review of sustainable rail technologies based on environmental, economic, social, and technical perspectives to achieve net zero emissions", Renew. Sustain. Energy Rev., vol. 185, 2023, Art. no. 113621.

[11] S. Khan et al., "Comprehensive Risk Assessment of Pakistan Railway Network: A Semi-Quantitative Risk Matrix Approach", Heliyon, 2024.

[12] S. Yan, L. Huang, P. Xu, and M. Wan, "Real-Time Rail Fault Diagnosis Based on Vibration Signal Analysis and Second-Order Sinusoidal Model", IEEE Sens. J., vol. 22, no. 4, pp. 3382–3396, 2022. doi: 10.1109/JSEN.2021.3139025

[13] J. Zhang, Q. Gao, S. J. Tan, and W. X. Zhong, "A precise integration method for solving coupled vehicle–track dynamics with nonlinear wheel-rail contact", J. Sound Vib., vol. 331, pp. 4763–4773, 2012.

[14] M. El Moueddeb, F. Louf, P.-A. Boucard, F. Dadié, G. Saussine, and D. Sorrentino, "An Efficient Numerical Model to Predict the Mechanical Response of a Railway Track in the Low-Frequency Range", Vibrations, 2022.

[15] M. Naeimi, J. A. Zakeri, M. Esmaeili, and M. Shadfar, "Influence of uneven rail irregularities on the dynamic response of the railway track using a three-dimensional model of the vehicle–track system", Veh. Syst. Dyn., vol. 53, no. 1, pp. 88–111, 2015. [Online]. Available: http://dx.doi.org/10.1080/00423114.2014.998243

[16] D. Łuczak, "Data-Driven Machine Fault Diagnosis of Multisensor Vibration Data Using Synchrosqueezed Transform and Time-Frequency Image Recognition with Convolutional Neural Network", Electronics, vol. 13, no. 12, Art. no. 2411, 2024. doi: 10.3390/electronics13122411

[17] A. Shah, B. S. Chowdhry, T. D. Memon, I. H. Kalwar, and A. Ware, "Real Time Identification of Railway Track Surface Faults using Canny Edge Detector and 2D Discrete Wavelet Transform", Ann. Emerg. Technol. Comput. (AETiC), vol. 4, no. 2, 2020. [Online]. Available: https://ssrn.com/abstract=3760258

[18] Y. Bai, W. Cheng, W. Wen, and Y. Liu, "Application of Time-Frequency Analysis in Rotating Machinery Fault Diagnosis", Shock Vib., 2023, Art. no. 9878228. doi: 10.1155/2023/9878228

[19] M. Hussain, T. D. Memon, I. Hussain, and Z. A. Memo, "Fault Detection and Identification Using Deep Learning Algorithms in Induction Motors", CMES-Comput. Model. Eng. Sci., 2022.

[20] A. Malekjafarian, C. A. Sarrabezolles, M. A. Khan, and F. Golpayegani, "A Machine-Learning-Based Approach for Railway Track Monitoring Using Acceleration Measured on an In-Service Train", Sensors (Basel), vol. 23, no. 17, Art. no. 7568, Aug. 31, 2023. doi: 10.3390/s23177568

[21] S. L. Grassie, "Rail corrugation", in Wheel–Rail Interface Handbook, Woodhead Publishing, 2009, pp. 349–376.

© Mehran University of Engineering and Technology 2025